TRIPLE-SEAL DISTANCE PIECE PURGE SYSTEM

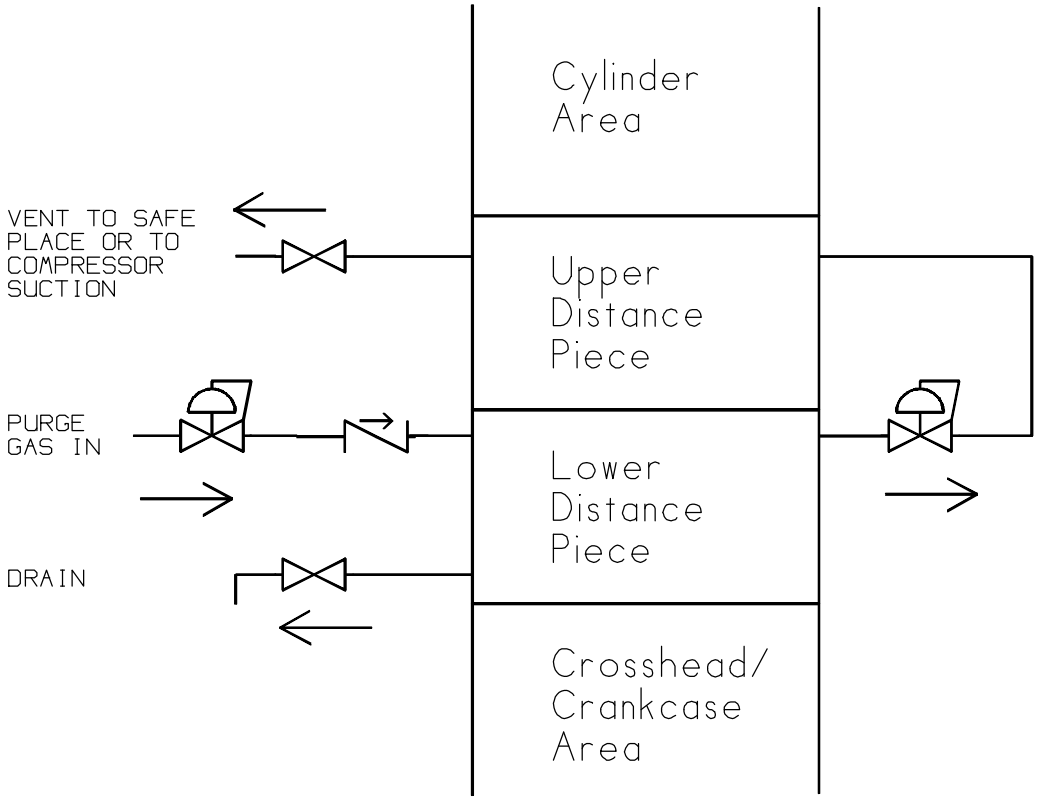
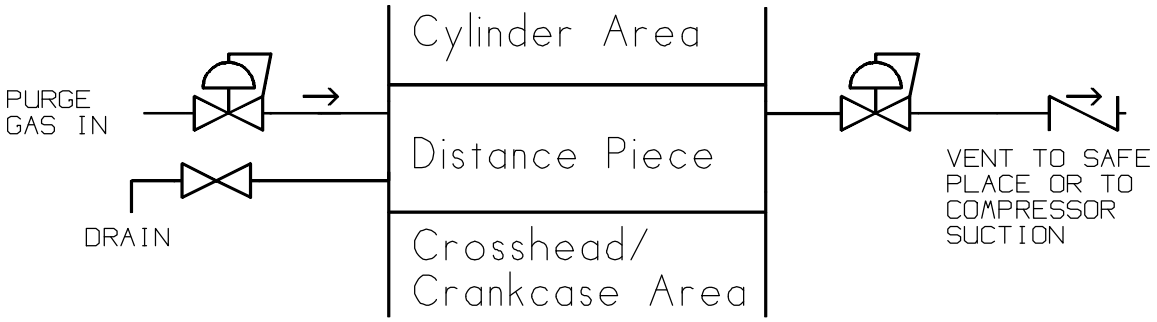
DOUBLE-SEAL DISTANCE PIECE PURGE SYSTEM